SWGL SERIES - 2SWGL12H

Progressive Cavity Pump

Dimensional Drawings

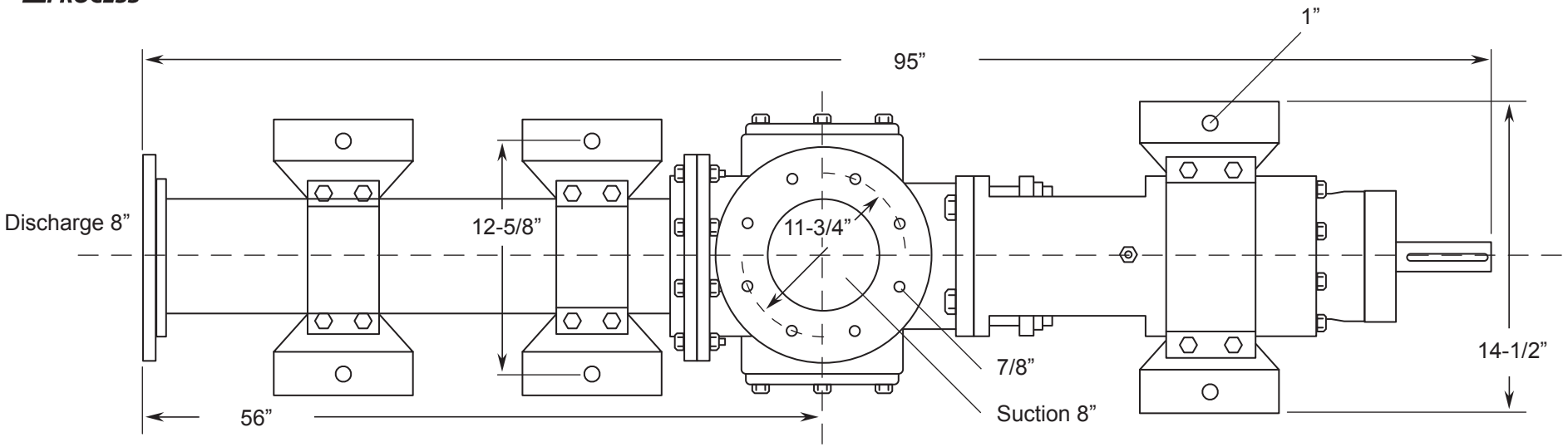

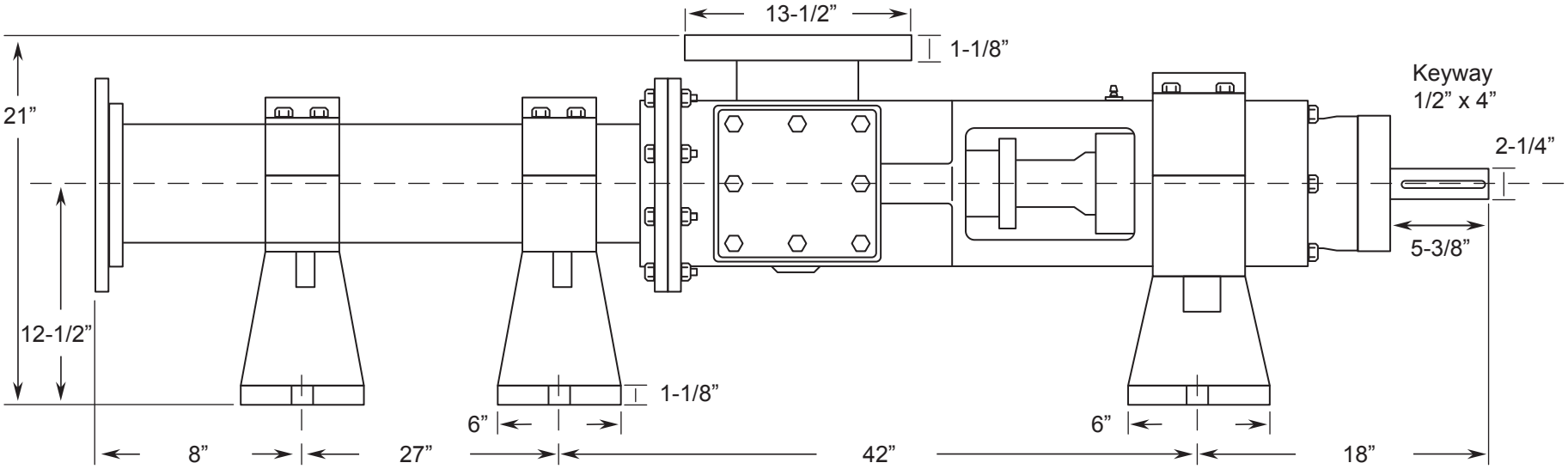

	Net weight
	≈ lbs.
ALL DIMN: Inches	**1285**

2 Stage Pump

P: 847.640.7867 F: 847.640.7855

2525 Clearbrook Drive Arlington Heights, IL 60005

www.libertyprocess.com